Our standard desktop **Dominator®** has many options available. These include automatic z-axis, rotary axis,conveyor, turntable, auto door and many more. This machine has removable side and bottom panels for larger part marking.

DOMINATOR®

- DUAL RED AIMING BEAMS FOR EASY FOCUS
- PORT READY FOR FUME EXTRACTION WITH FLEXIBLE ARM
- INTEGRATED PC WITH PRELOADED SOFTWARE
- ADJUSTABLE MONITOR WITH MOUNTED KEYBOARD
- LARGE PRODUCT AREA WITH 3 PLACE DOCKING STATION

Patent No.: US D872,140 S

SPECIFICATIONS

Dominator Specifications/Footprint

Max Marking Area:
Standard 163 FL Lens: 4.33" x 4.33"
Optional 100 FL Lens: 2.15" x 2.15"
Optional 254 FL Lens: 6.89" x 6.89"

Max Work Piece:
Standard 163 FL Lens:
Up to 14"H x 25"W x 12"D or 17.5"W x 26"D
Optional 100 FL Lens:
Up to 18"H x 25"W x 12"D or 17.5"W x 26"D
Optional 254 FL Lens:
Up to 10"H x 25"W x 12"D or 17.5"W x 26"D
*Additional options available

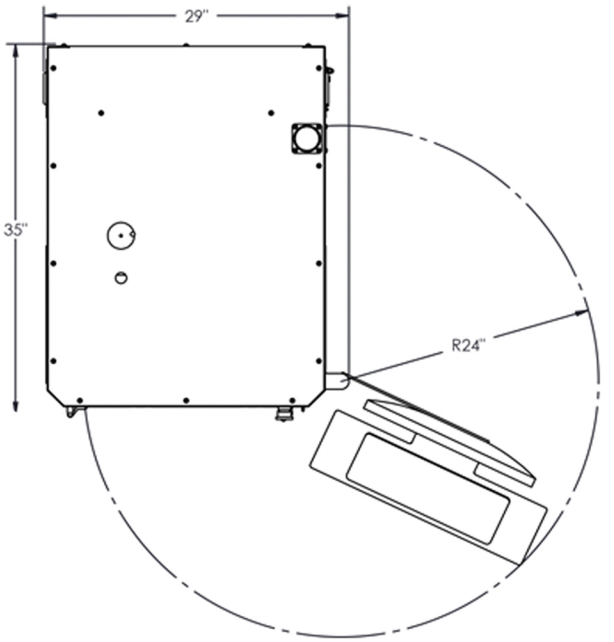

Machine Footprint:
29"W (less monitor swing arm) x 35"D x 33"H
Distance from the back of the machine to the front of the legs is 23.5"
The smallest dimensions for the table would be 22"W x 24"D
The machine is 35"D, and is designed to overhang 11" off the front of bench to allow for large format marking through the bottom base plate (Class IV)

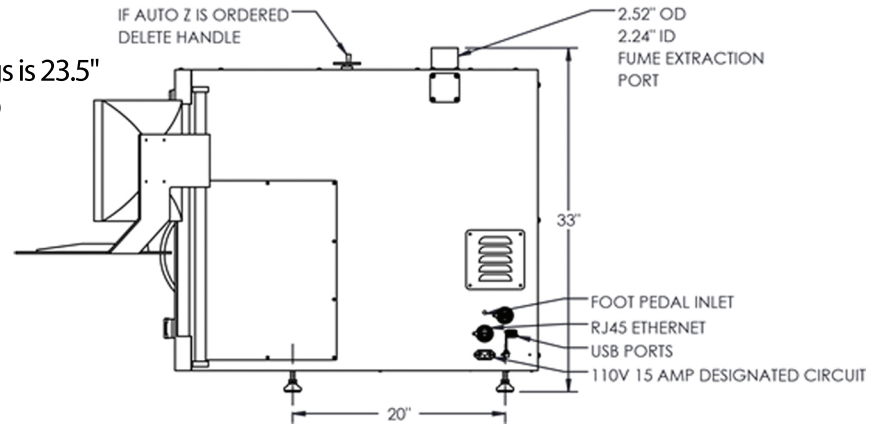

Laser Power: 20watt - 100watt
Laser Type: IPG, SPI, or LMT MOPA fiber source
Wavelength: 1064nm
kHz: 1-4000kHz, depending on machine model
Electrical Requirements: 110VAC (15 Amps)
Fume Extraction Requirements: 205 CFM @96mb
Scan Head: LMT Digital Scan Head

Warranty: 3 years on IPG and SPI laser sources, 26 months on LMT MOPA source. 2 year on machine components. (see warranty terms)